675 FG 1500A PNEUMATIC INLINE POWDER SAMPLER SCHEMATIC

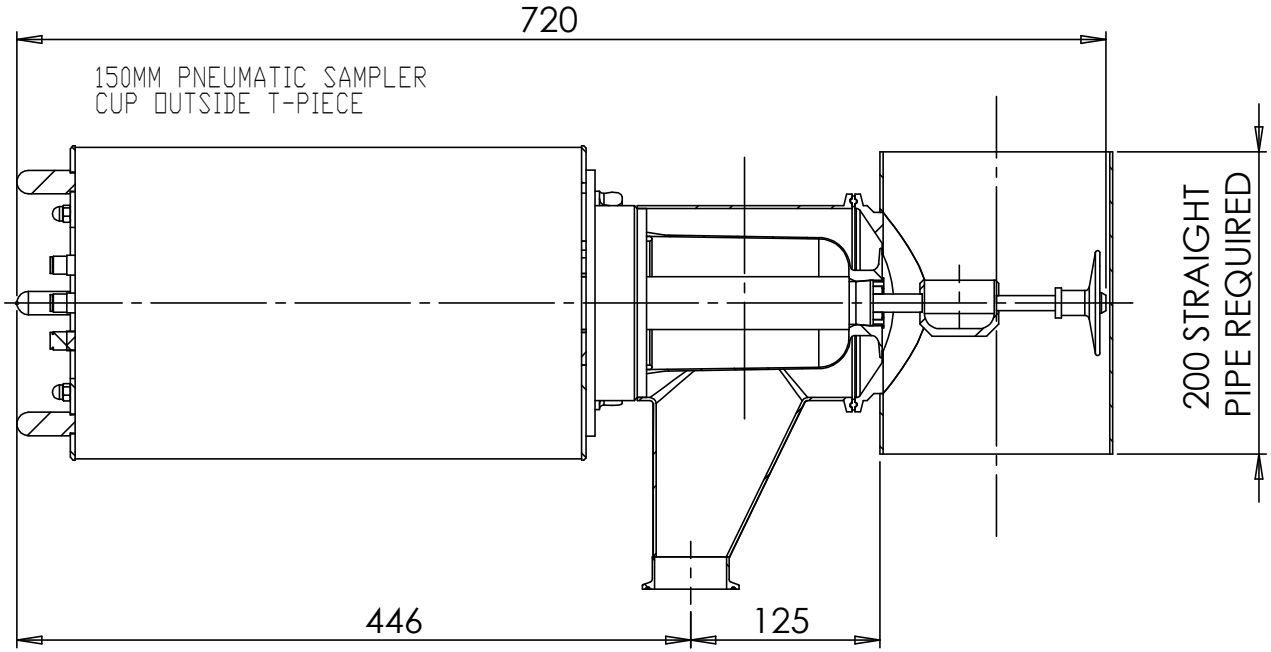

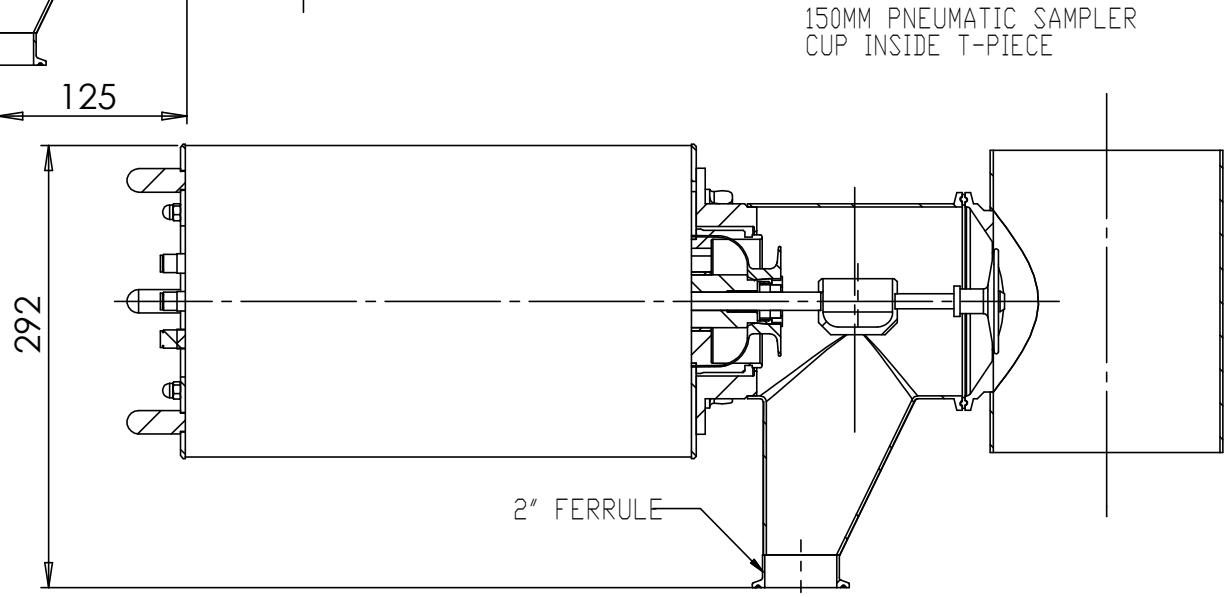

QAQC LAB
www.qclabequipment.com
WHITE STONE VA 22578 TEL (866) 244-1578

150MM PNEUMATIC SAMPLER SHOWS
140 MM STROKE